LM5022 Boost LED Driver Evaluation Board

National Semiconductor
Application Note 1605
Chris Richardson
October 2007

Specifications Of The Board

This evaluation board has been designed to demonstrate the LM5022 low-side controller as a step-up (boost) regulator for delivering constant current to an array of high power LEDs. A complete schematic for all the components is shown in *Figure 1*. The board is two layers with components and power paths in 2oz. copper. The board is 62mil FR4 laminate and the Bill of Materials table lists all the components used in the example circuit.

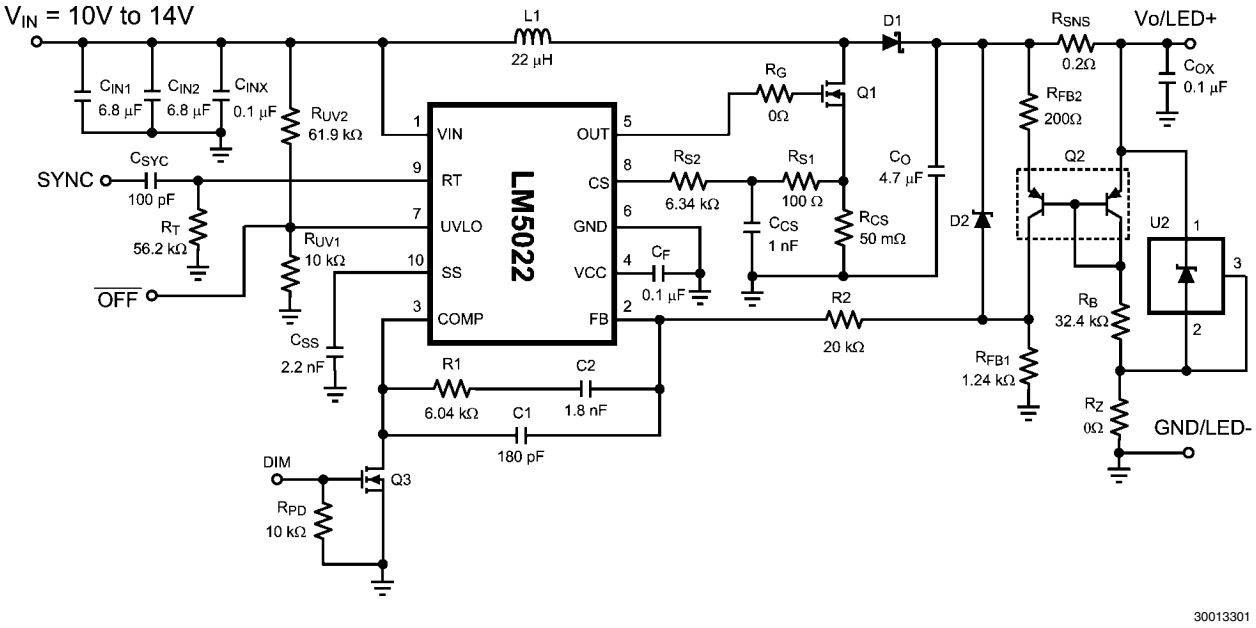

FIGURE 1. Circuit Schematic

Example Circuit

The example circuit which comes on the evaluation board powers ten series-connected white LEDs at a forward current, I_F, of 1A ±10% from an input of 10V to 14V. White LEDs based on InGaN technology have a forward voltage, V_F, of 3.0V to 4.0V, so the expected total output voltage is therefore 30V to 40V. The switching frequency is 300 kHz. Efficiency for the converter is 93% at an input voltage of 12.0V and an output current of 1.0A.

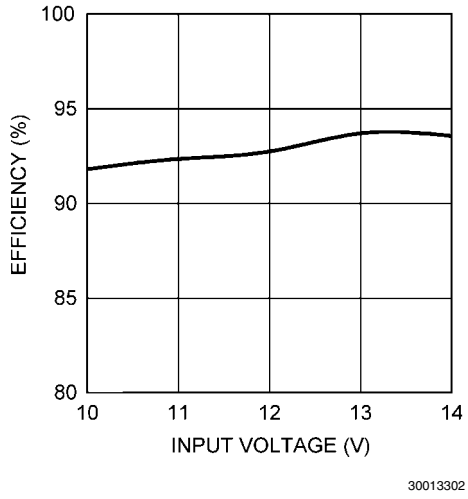

FIGURE 2. Efficiency

Powering The Converter

The input voltage should be connected between the **VIN** and **GND** terminals on the left side of the board. The series-connected chain of LEDs should be connected between the **LED +** and **LED-** terminals or using connector **J1** as shown in *Figure 3*. Solid 18 or 20 gauge wire with about 1 cm of insulation stripped away makes a convenient solderless connection to **J1**.

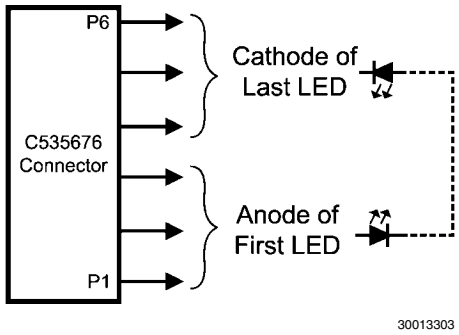

FIGURE 3. LED Connector

Enabling The Converter

Once the input voltage has risen above the UVLO threshold of 9.0V the **OFF*** terminal controls the state of the converter. The LM5022 is disabled whenever the **OFF*** terminal is grounded. The LM5022 is enabled whenever the **OFF*** terminal is open-circuited. Upon enabling the LM5022 will perform a soft-start, after which the output supplies constant current to the LEDs.

PWM Dimming

The light output of LED arrays is often controlled or reduced with a PWM signal applied to the output current. This dimming method allows the converter to operate at a specific output current level (usually a set point determined by the LED manufacturer) instead of adjusting the average output current. The LM5022 boost LED evaluation board provides the **DIM** terminal as an input for PWM signals. **DIM** connects to the gate of a small MOSFET, **Q3**, that short-circuits or open-circuits the COMP pin of the LM5022. When the voltage at **DIM** is logic high, the converter output current is off. When the voltage at **DIM** is logic low, the converter output current is on.

Output Open-Circuit Protection

The zener diode **D2** provides protection in the case of an output open circuit. This can happen if the LED chain is disconnected or one of the LEDs fails as an open circuit while the LM5022 is powered. Open circuit is the most common LED failure mode, and it effectively disconnects the feedback path of the converter. Without protection a boost regulator-based LED driver would attempt to drive the output voltage beyond the limits of the external components. With **D2** in the place, any output open circuit causes the output voltage to equal the breakdown of the zener diode plus the system feedback voltage of 1.25V. The minimum zener breakdown voltage should therefore be just higher than the maximum LED array voltage. For the example circuit, the minimum zener breakdown is 44.6V, providing a total output voltage of 46V or higher. Resistor **Rfb1** limits the zener current to approximately 1 mA.

MOSFET Footprints

The LM5022 boost LED evaluation board has a footprint for a single N-channel MOSFET with an SO-8 package using the industry standard pinout. (See *Figure 4*) This footprint can also accept thermally enhanced MOSFET packages that are compatible with SO-8 footprints.

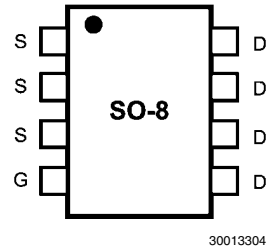

FIGURE 4. SO-8 MOSFET Pinout

Testing The Converter

Figure 5 shows a block diagram of connections for making measurements of efficiency. The wires used for making connections at the input should be rated to at least 5A of continuous current and should be no longer than is needed for convenient testing. A series ammeter capable of measuring 10A or more should be used for both the input and the output lines. Dedicated voltmeters should be connected with their positive and negative leads right at the four power terminals at the sides of the board. This measurement technique minimizes the resistive loss in the wires that connect the evaluation board to the input power supply and the LEDs. Output ripple current measurements should be taken with an oscilloscope and an AC current probe or AC-coupled DC current probe. This measurement can be taken anywhere in the loop formed by the LEDs and **J1**, however the recommended location is between the **LED+/J1** connector and the anode of the first LED.

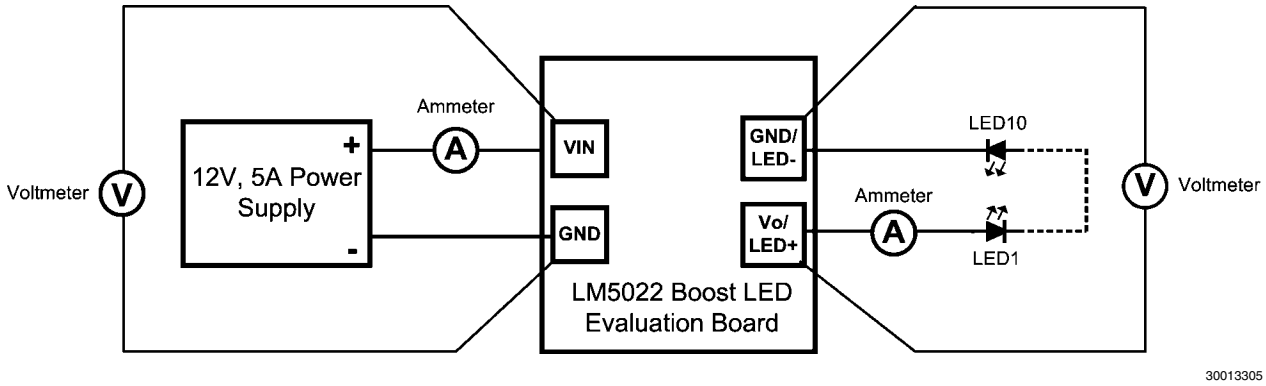

FIGURE 5. Efficiency Measurement Setup

Permanent Components

The following components should remain the same for any new circuits tested on the LM5022 boost LED evaluation board:

Name	Value
Cinx	0.1 µF
Cf	1 µF
Ccs	1 nF
Rpd	10 kΩ
Rs1	100Ω

Additional Footprints

The 100 pF capacitor **Csyc** provides an AC input path for external clock synchronization. Detection of the sync pulse requires a peak voltage level greater than 3.7V at the RT/SYNC pin. Note the DC voltage at RT/SYNC is approximately 2V to allow compatibility with 3.3V logic. The sync pulse width should be set between 15 ns to 150 ns by the external components. The **Rt** resistor is always required, whether the oscillator is free running or externally synchronized. **Rt** must be selected so that the free-running oscillator frequency is below the lowest synchronization frequency.

Footprint **U2** and current limiting resistor **Rz** allow the user to add a shunt regulator voltage reference or zener diode to maintain tight control over the bias current through the right-hand transistor of **Q2** as the output voltage changes. Tight regulation of the bias current allows better accuracy of the LED current. When using this method resistor **Rb** is re-selected to draw the 1 mA bias current using the following equation:

$Rb = (V_Z – 0.6) / 0.001$ (V_Z is the zener or reference voltage)

The 0Ω placeholder **Rz** is re-selected to bias the zener/reference voltage and Q2 using the following:

$Rz = (V_{O\text{-}MIN} - V_Z) / (I_Z + 0.001)$ (I_Z is the zener/reference bias current)

Typical Performance Characteristics

(T_A = 25°C and V_{IN} = 12V unless noted)

Output Current Vs. Input Voltage

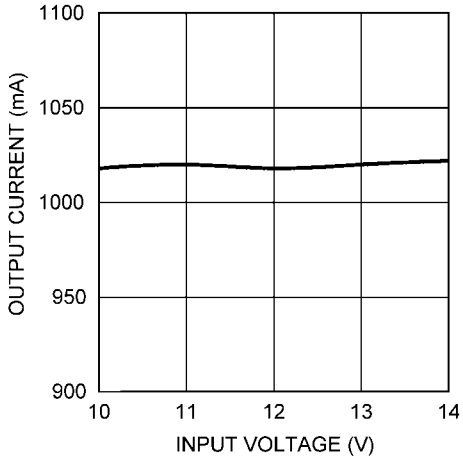

30013306

Output Current Vs. Temperature

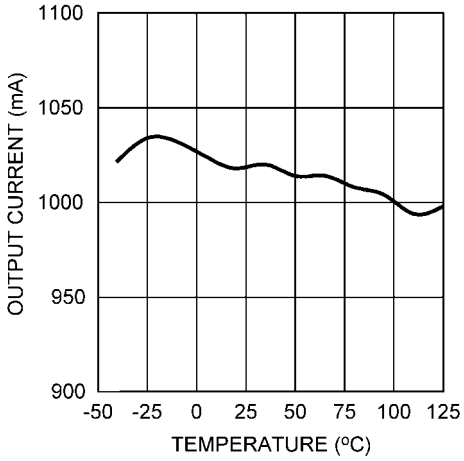

30013307

Switch Node Voltage

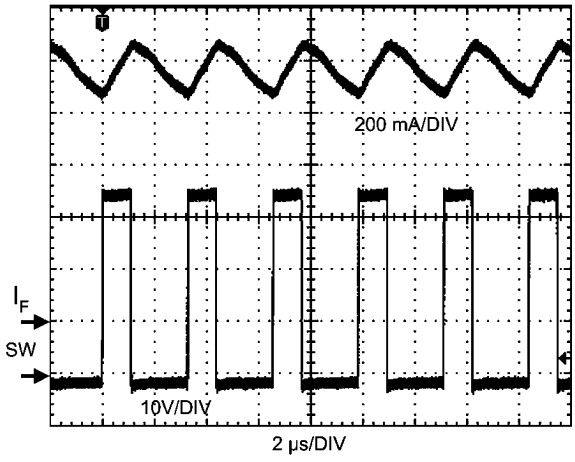

30013308

Output Current Ripple

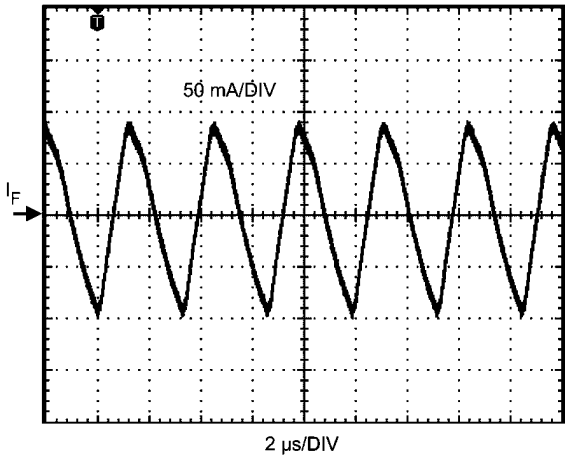

30013309

Dimming Response (I_F Rising)

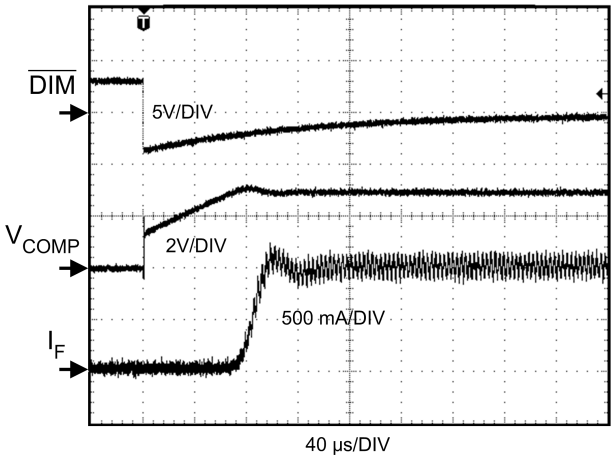

30013310

Dimming Response (I_F Falling)

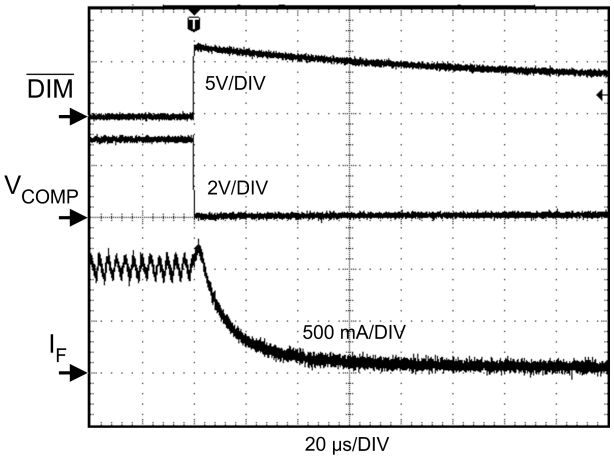

30013311

Bill of Materials

ID	Part Number	Type	Size	Parameters	Qty	Vendor
U1	LM5022	Low-Side Controller	MSOP-10	60V	1	NSC
U2	Not Used					
Q1	Si4850EY	N-MOSFET	SO-8	60V, 31mΩ, 27nC	1	Vishay
Q2	DMMT5401	Dual PNP	SOT-26	150V, 300mW	1	Diodes, Inc
Q3	TN0200K	N-MOSFET	SOT-23	20V, 0.7A	1	Vishay
D1	CMSH2-60	Schottky Diode	SMB	60V, 2A	1	Central Semi
D2	CMDZ47L	Zener Diode	SOD-323	47V, 50µA	1	Central Semi
L1	PF0552.223NL	Inductor	12.5 x12.5 x 6.0mm	22µH, 4.8A, 35mΩ	1	Pulse
Cin1 Cin2	C3225X7R1E685M	Capacitor	1210	6.8µF, 25V	2	TDK
Co	C4532X7R1H475M	Capacitor	1812	4.7µF, 50V, 3mΩ	1	TDK
Cf	C3216X7R1E105K	Capacitor	1206	1µF, 25V	1	TDK
Cinx Cox	C2012X7R2A104M	Capacitor	0805	100nF, 100V	2	TDK
C1	VJ0805Y181KXXAT	Capacitor	0805	180pF 10%	1	Vishay
C2	VJ0805Y182KXXAT	Capacitor	0805	1.8nF 10%	1	Vishay
Css	VJ0805Y222KXXAT	Capacitor	0805	2.2nF 10%	1	Vishay
Csns	VJ0805Y102KXXAT	Capacitor	0805	1nF 10%	1	Vishay
Csyc	VJ0805A101KXXAT	Capacitor	0805	100pF 10%	1	Vishay
R1	CRCW08056041F	Resistor	0805	6.04kΩ 1%	1	Vishay
R2	CRCW08052002F	Resistor	0805	20kΩ 1%	1	Vishay
Rb	CRCW08053242F	Resistor	0805	32.4kΩ 1%	1	Vishay
Rfb1	CRCW08051241F	Resistor	0805	1.24kΩ 1%	1	Vishay
Rfb2	CRCW08052000F	Resistor	0805	200Ω	1	Vishay
Ruv1 Rpd	CRCW08051002F	Resistor	0805	10kΩ 1%	2	Vishay
Rg Rz	CRCW08050RJ	Resistor	0805	0Ω	2	Vishay
Rs1	CRCW0805101J	Resistor	0805	100Ω 5%	1	Vishay
Rs2	CRCW08056341F	Resistor	0805	6.34kΩ 1%	1	Vishay
Rcs	ERJL14KF50M	Resistor	1210	50mΩ, 0.5W 1%	1	Panasonic
Rsns	ERJ8BQFR20V	Resistor	1206	0.2Ω, 1%, 0.33W	1	Panasonic
Rt	CRCW08055622F	Resistor	0805	56.2kΩ 1%	1	Vishay
Ruv2	CRCW08056192F	Resistor	0805	61.9kΩ 1%	1	Vishay
VIN, Vo/ LED+ GND/ LED- GND2 GND3	160-1026-03	Solder-plated Turret	0.094"		5	Cambion
DIM $\overline{\text{OFF}}$ SYNC	160-1512-02	Solder-plated Turret	0.062"		3	Cambion

PC Board Layout

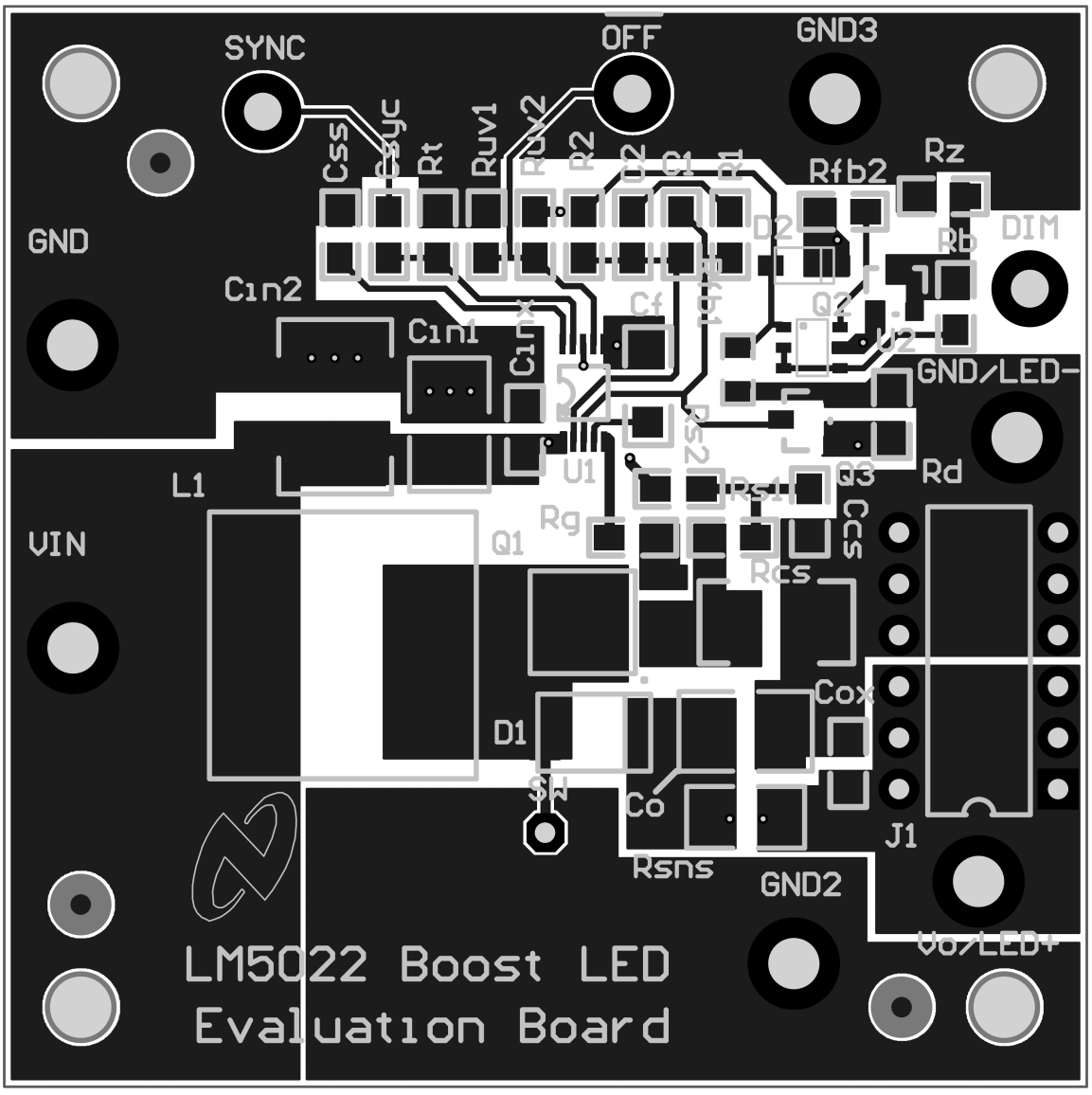

30013312

PCB Top Layer and Top Overlay

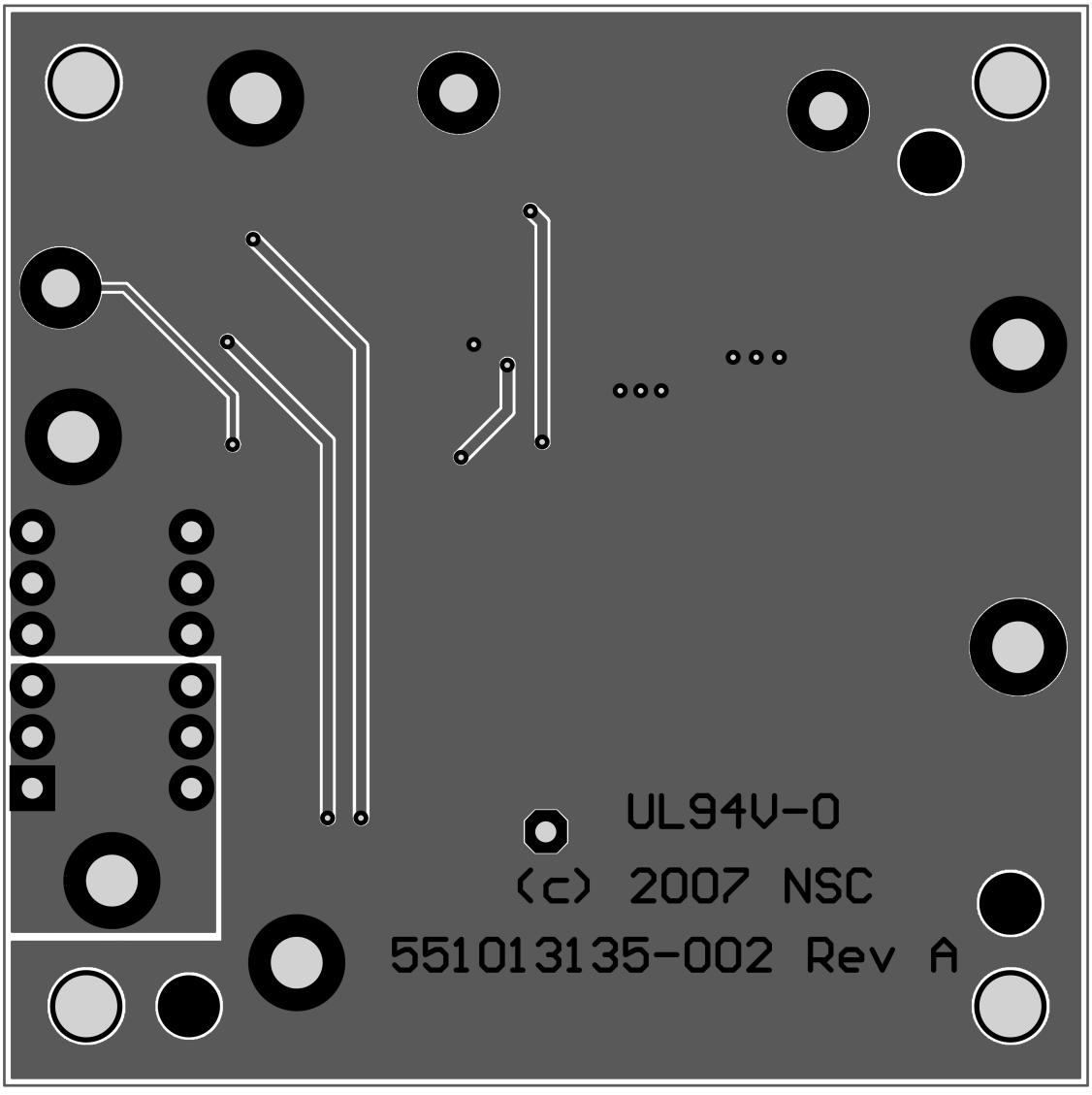

30013313

PCB Bottom Layer

Notes

For the most current product information visit us at www.national.com

National Semiconductor Americas Customer Support Center
Email: new.feedback@nsc.com
Tel: 1-800-272-9959

National Semiconductor Europe Customer Support Center
Fax: +49 (0) 180-530-85-86
Email: europe.support@nsc.com
Deutsch Tel: +49 (0) 69 9508 6208
English Tel: +49 (0) 870 24 0 2171
Français Tel: +33 (0) 1 41 91 8790

National Semiconductor Asia Pacific Customer Support Center
Email: ap.support@nsc.com

National Semiconductor Japan Customer Support Center
Fax: 81-3-5639-7507
Email: jpn.feedback@nsc.com
Tel: 81-3-5639-7560