# Wide-Range Current-to-Frequency Converters

National Semiconductor
Application Note 240
Robert A. Pease
May 1980

Does an analog-to-digital converter cost you a lot if you need many bits of accuracy and dynamic range? Absolute accuracy better than 0.1% is likely to be expensive. But a capability for wide dynamic range can be quite inexpensive. Voltage-to-frequency (V-to-F) converters are becoming popular as a low-cost form of A-to-D conversion because they can handle a wide dynamic range of signals with good accuracy.

Most voltage-to-frequency (V-to-F) converters actually operate with an input current which is proportional to the voltage input:

$$I_{IN} = \frac{V_{IN}}{R_{IN}}$$

(*Figure 1*). This current is integrated by an op amp, and a charge dispenser acts as the feedback path, to balance out the average input current. When an amount of charge Q=I•T (or Q=C•V) per cycle is dispensed by the circuit, then the frequency will be:

$$f = \left(\frac{V_{IN} - V_{OS}}{R_{IN}} + I_b\right) \times \frac{1}{Q}.$$

When $V_{IN}$ is large:

$$f \cong \frac{V_{IN}}{R_{IN}} \times \frac{1}{Q}.$$

When $V_{IN}$ covers a wide dynamic range, the $V_{OS}$ and $I_b$ of the op amp must be considered, as they greatly affect the usable accuracy when the input signal is very small. For example, when the full-scale input is 10V, a signal which is 100 dB below full-scale will be only 100 µV. If the op amp has an offset drift of ± 100 µV, (whether caused by time or temperature), that would cause a ±100% error at this signal level. However, a current-to-frequency converter can easily cover a 120 dB range because the voltage offset problem is not significant when the input signal is actually a current source. Let's study the architecture and design of a current-to-frequency converter, to see where we can take advantage of this.

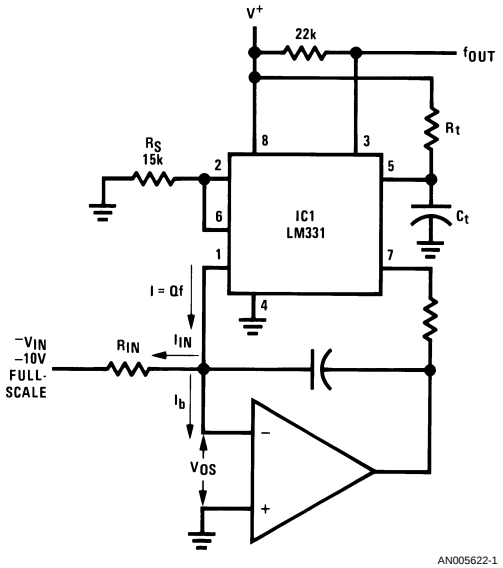


**FIGURE 1. Typical Voltage-to-Frequency Converter**

When the input signal is a current, the use of a low-voltage-drift op amp becomes of no advantage, and low bias current is the prime specification. A low-cost BI-FET™ op amp such as the LF351A has $I_b$ <100 pA, and temperature coefficient of $I_b$ less than 10 pA/°C, at room temperature.

In a typical circuit such as *Figure 2*, the leakage of the charge dispenser is important, too. The LM331 is only specified at 10 nA max at room temperature, because that is the smallest current which can be measured economically on high-speed test equipment. The leakage of the LM331's

BI-FET™ is a trademark of National Semiconductor Corp.

AN-240

current-source output at pin 1 is usually 2 pA to 4 pA, and is always less than the 100 pA mentioned above, at 25˚C.

The feedback capacitor $C_F$ should be of a low-leakage type, such as polypropylene or polystyrene. (At any temperature above 35˚C, mylar's leakage may be excessive.) Also, low-leakage diodes are recommended to protect the circuit's input from any possible fault conditions at the input. (A 1N914 may leak 100 pA even with only 1 millivolt across it, and is unsuitable.)

After trimming this circuit for a low offset when $I_{IN}$ is 1 nA, the circuit will operate with an input range of 120 dB, from 200 µA to 100 pA, and an accuracy or linearity error well below (0.02% of the signal plus 0.0001% of full-scale).

The zero-offset drift will be below 5 or 10 pA/˚C, so when the input is 100 dB down from full-scale, the zero drift will be less than 2% of signal, for a ±5˚C temperature range. Another way of indicating this performance is to realize that when the input is 1/1000 of full-scale, zero drift will be less than 1% of that small signal, for a 0˚C to 70˚C temperature range.

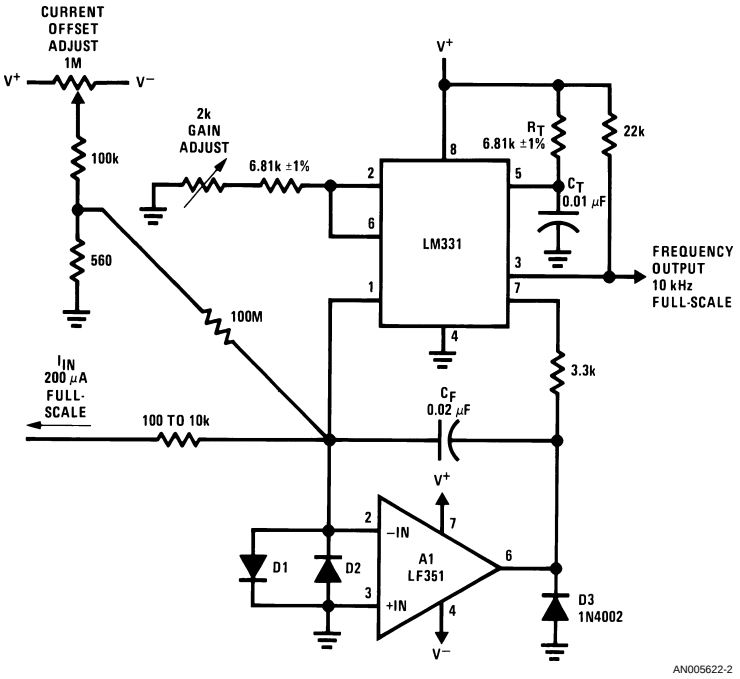


D1, D2=1N457, 1N484, or similar low-leakage planar diode

**FIGURE 2. Practical Wide-Range Current-to-Frequency Converter**

What if this isn't good enough? You *could* get a better op amp. For example, an LH0022C has 10 pA max $I_b$. But it is silly to pay for such a good op amp, with low V offset errors, when only a low input current specification is needed. The circuit of *Figure 3* shows the simple scheme of using FET followers ahead of a conventional op amp. An LF351 type is suitable because it is a cheap, quick amplifier, well suited for this work. The 2N5909s have a maximum $I_b$ of 1.0 pA, and at room temperature it will drift only 0.1 pA/˚C. Typical drift is 0.02 pA/˚C.

The voltage offset adjust pot is used to bring the summing point within a millivolt of ground. With an input signal big enough to cause $f_{OUT}$=1 second per cycle, trim the V offset adjust pot so that closing the *test* switch makes no effect on the output frequency (or, output period). Then adjust the input current offset pot, to get $f_{OUT}$=1/1000 of full-scale when $I_{IN}$ is 1/1000 of full-scale. When $I_{IN}$ covers the 140 dB range, from 200 µA to 20 pA, the output will be stable, with very good zero offset stability, for a limited temperature range around room temperature. Note these precautions and special procedures:

1. Run the LM331 on 5V to 6V to keep leakage down and to cut the dissipation and temperature rise, too.
2. Run the FETs with a 6V drain supply.
3. Guard all summing point wiring away from all other voltages.

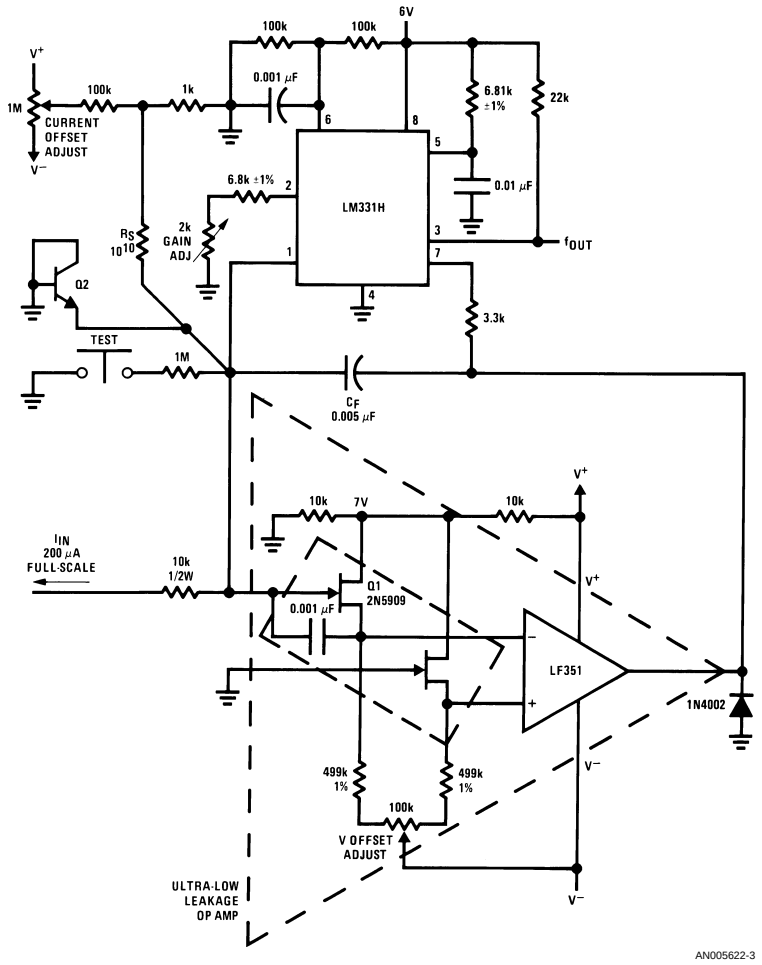


Q1 - 2N5909 or similar
1G<1 pA
Q2 - 2N930 or 2N3565

**FIGURE 3. Very-Wide-Range Current-to-Frequency Converter**

An alternate approach, shown in *Figure 4*, uses an LM11C as the input pre-amplifier. The LM11C has much better voltage drift than any of the other amplifiers shown here (normally less than 2 μV/˚C) and excellent current drift, less than 1 pA/˚C by itself, and typically 0.2 pA/˚C when trimmed with the 2N3904 bias current compensation circuit as shown. Of course, the LM331's leakage of 1 pA/˚C will still double every 10˚C, so that having an amplifier with excellent $I_b$ characteristics does not solve the whole problem, when trying to get good accuracy with a 100 pA signal. For that job, even the leakage of the LM331 must be guarded out!

What if even lower ranges of input current must be accepted? While it might be possible to use a current-to-voltage converter ahead of a V-to-F converter, offset voltage drifts would hurt dynamic range badly. Response and zero-drift of such an I-V will be disappointing. Also, it is not feasible to starve the LM331 to an arbitrary extent.

For example, while its $I_{OUT}$ (full-scale) of 280 μA DC can be cut to 10 μA or 28 μA, it cannot be cut to 1 μA or 2.8 μA with good accuracy at 10 kHz, because the internal switches in the integrated circuit will not operate with best speed and precision at such low currents.

Instead, the output current from pin 1 of the LM331 can be fed through a current attenuator circuit, as shown in *Figure 5*. The LM334 (temperature-to-current converter IC) causes −120 mV bias to appear at the base of Q2. When a current flows out of pin 1 of the LM331, 1/100 of the current will flow out of Q1's collector, and the rest will go out of Q2's collector. As the LM334's current is linearly proportional to Kelvin temperature, the −120 mV at Q2's base will change linearly with temperature so that the Q1/Q2 current divider stays at 1:100, invariant of temperature, according to the equation:

$$i_1/i_2 = e\frac{q(Vb1 - Vb2)}{kT}$$

This current attenuator will work stably and accurately, even at high speeds, such as for 4 µS current pulses. Thus, the output of Q1 is a charge pump which puts out only 10 picocoulombs per pulse, with surprisingly good accuracy. Note also that the LM331's leakage is substantially attenuated also, by a factor of 100 or more, so that source of error virtually disappears. When Q1 is off, it is really *OFF*, and its leakage is typically 0.01 pA if the summing point is within a millivolt or two of ground.

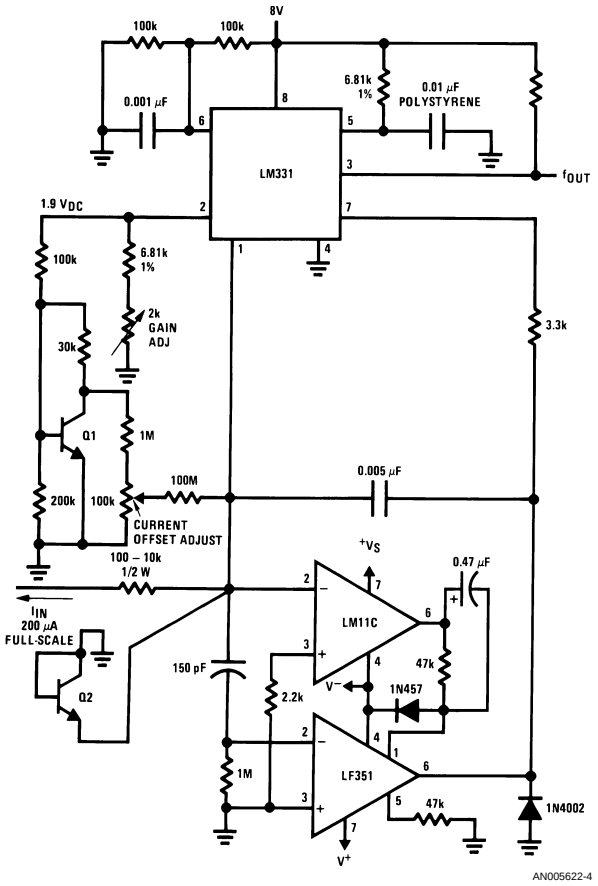


Q1, 2N3904 or any silicon NPN
Q2, 2N930 or 2N3565

**FIGURE 4. Very-Wide-Range I-to-F Converter with Low Voltage Drift**

To do justice to this low leakage of the VFC, the op amp should be made with MOSFETs for Q3 and Q4, such as the Intersil 3N165 or 3N190 dual MOSFET (with no gate-protection diodes). When MOSFETs have relatively poor offset voltage, offset voltage drift, and voltage noise, this circuit does not care much about these characteristics, but instead takes advantage of the MOSFET's superior current leakage and current drift.

Now, with an input current of 1 µA, the full-scale output frequency will be 100 kHz. At a 1 nA input, the output frequency will be 100 Hz. And, when the input current is 1 pA, the output frequency will drop to 1 cycle per 10 seconds or 100 mHz. When the input current drops to zero, frequencies as small as 500 µHz have been observed, at 25˚C and also as warm as 35˚C. Here is a wide-range data converter whose zero drift is *well* below 1 ppm per 10˚C! (Rather more like 0.001 ppm per˚C.) The usable dynamic range is better than 140 dB, with excellent accuracy at inputs between 100% and 1% and 0.01% and 0.0001% of full-scale.

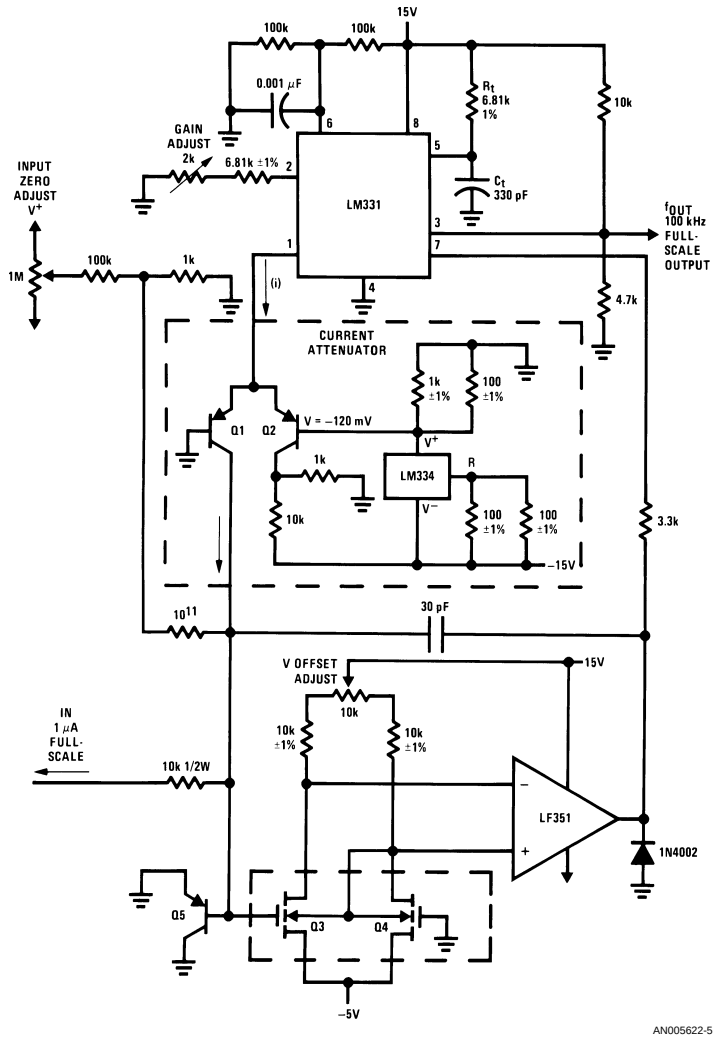


Q1, Q2, Q5 - 2N3906, 2N4250 or similar
Q3, Q4 - 3N165, 3N190 or similar. See text
Keep Q1, Q2 and LM334 at the same temperature

**FIGURE 5. Picoampere-to-Frequency Converters**

If a positive signal is of interest, the LM331 can be applied with a current reflector as in *Figure 6*. This current reflector has high output impedance, and low leakage. Its output can go directly to the summing point, or via a current attenuator made with NPN transistors, similar to the PNP circuit of *Figure 5*. This circuit has been observed to cover a wide (130 dB) range, with 0.1% of signal accuracy.

What is the significance of this wide-range current-to-frequency converter? In many industrial systems the question of using an inexpensive 8-bit converter instead of an expensive 12-bit data converter is a battle which is decided everyday. But if the signal source is actually a current source, then you can use a V-to-F converter to make a cheap 14-bit converter or an inexpensive converter with 18 bits of dynamic range. The choice is yours.

Why use an I-to-F converter?

- It is a natural form of A-to-D conversion.
- It naturally facilitates integration, as well.
- There are many signals in the world, such as photospectrometer currents, which like to be digitized and integrated as a standard part of the analysis of the data.

- Similarly: photocurrents, dosimeters, ionization currents, are examples of currents which beg to be integrated in a current-to-frequency meter.
- Other signal sources which provide output currents are:
  - — Phototransistors
  - — Photo diodes
  - — Photoresistors (with a fixed voltage bias)
  - — Photomultiplier tubes
  - — Some temperature sensors
  - — Some IC signal conditioners

Why have a fast frequency out?

- A 100 kHz output full-scale frequency instead of 10 kHz means that you have 10 times the resolution of the signal. For example, when $I_{IN}$ is 0.01% of full-scale, the f will be 10 Hz. If you integrate or count that frequency for just 10 seconds, you can resolve the signal to within 1% − a factor of 10 better than if the full-scale frequency were slower.

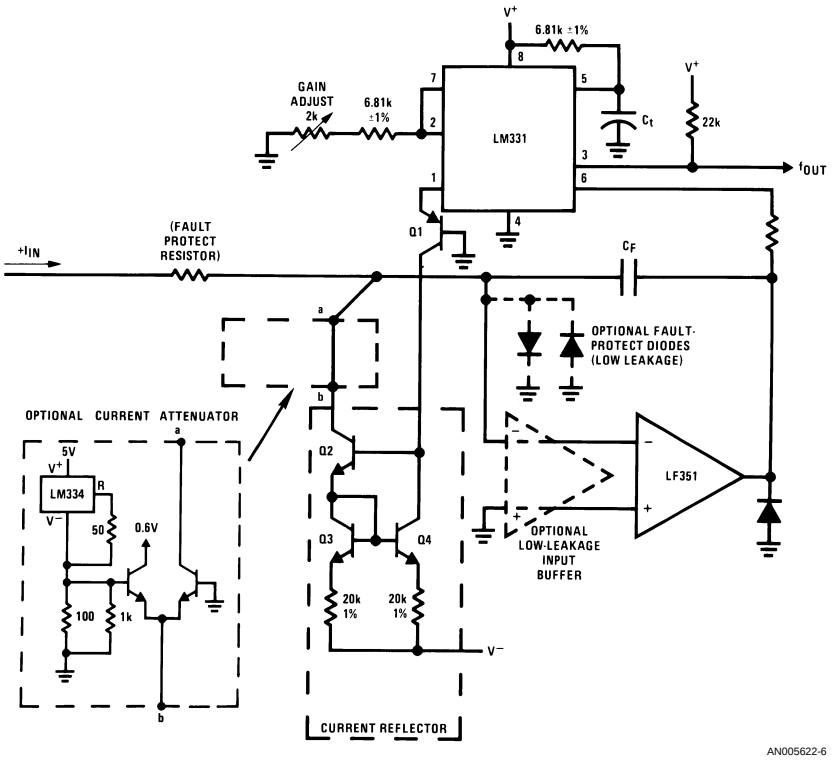


Q1 - 2N4250 or 2N3906
Q2, Q3, Q4 - 2N3904 or 2N3565

**FIGURE 6. Current-to-Frequency Converter For Positive Signals**

Book Extract End

7

**LIFE SUPPORT POLICY**

NATIONAL'S PRODUCTS ARE NOT AUTHORIZED FOR USE AS CRITICAL COMPONENTS IN LIFE SUPPORT DEVICES OR SYSTEMS WITHOUT THE EXPRESS WRITTEN APPROVAL OF THE PRESIDENT OF NATIONAL SEMICONDUCTOR CORPORATION. As used herein:

1. Life support devices or systems are devices or systems which, (a) are intended for surgical implant into the body, or (b) support or sustain life, and whose failure to perform when properly used in accordance with instructions for use provided in the labeling, can be reasonably expected to result in a significant injury to the user.
2. A critical component in any component of a life support device or system whose failure to perform can be reasonably expected to cause the failure of the life support device or system, or to affect its safety or effectiveness.

**National Semiconductor Corporation**
Americas
Tel: 1-800-272-9959
Fax: 1-800-737-7018
Email: support@nsc.com

www.national.com

**National Semiconductor Europe**
Fax: +49 (0) 1 80-530 85 86
Email: europe.support@nsc.com
Deutsch Tel: +49 (0) 1 80-530 85 85
English Tel: +49 (0) 1 80-532 78 32
Français Tel: +49 (0) 1 80-532 93 58
Italiano Tel: +49 (0) 1 80-534 16 80

**National Semiconductor Asia Pacific Customer Response Group**
Tel: 65-2544466
Fax: 65-2504466
Email: sea.support@nsc.com

**National Semiconductor Japan Ltd.**
Tel: 81-3-5620-6175
Fax: 81-3-5620-6179





PrintDate=1998/04/22 PrintTime=15:12:31 39562 an005622 Rev. No. 3 cmserv **Proof**