# LMZ10501 and LMZ10500 SIMPLE SWITCHER® Nano Module Evaluation Board

National Semiconductor
Application Note 2166
Denislav Petkov
October 3, 2011

## Introduction

The LMZ10501 and LMZ10500 SIMPLE SWITCHER® nano modules are easy-to-use DC-DC solutions optimized for space-constrained applications. The LMZ10501 is capable of driving up to 1A load with excellent power conversion efficiency, line and load regulation, and EMI performance. The LMZ10500 is a 650mA version module and is pin-to-pin compatible with the LMZ10501.

The LMZ10501 and LMZ10500 Evaluation Board is configured for 1.8V output voltage from 2.7V to 5.5V input. The resistor voltage divider $R_T$ and $R_B$ set the output voltage. The external capacitor $C_{VC}$ bypasses the $V_{CON}$ pin and provides additional soft start time. See datasheet for component selection and device information details. The board features additional component footprints for various device enabling schemes and AC signal injection terminals for feedback loop measurements.

The evaluation board with its default Bill of Materials offers great EMI performance, complying with the EN 55022 Class B radiated emissions standard.

## Board Specifications

- $V_{IN}$ = 2.7V to 5.5V
- $V_{OUT}$ = 1.8V (default setting)
- 1A max load (LMZ10501)
- 650mA max load (LMZ10500)
- 2MHz switching frequency
- 4 layers PCB with 1oz copper
- 4.3 x 4.3 cm (1700 x 1700 mil) PCB size
- Low radiated EMI (EN 55022 Class B compliant)

## Typical Performance Characteristics

**Efficiency $V_{OUT}$ = 1.8V**

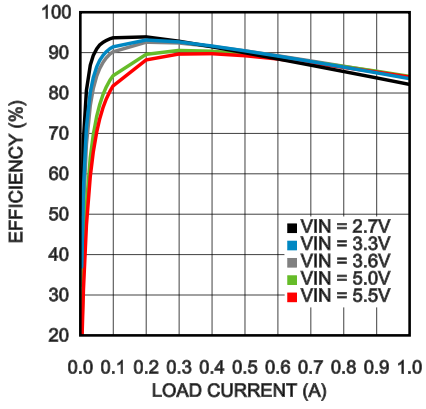


30166659

**Line and Load Regulation**

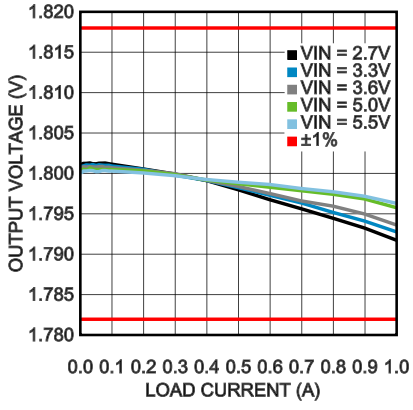


30166660

**Output Ripple**
**$V_{IN}$ = 5V, $V_{OUT}$ = 1.8V, $I_{OUT}$ = 1A**

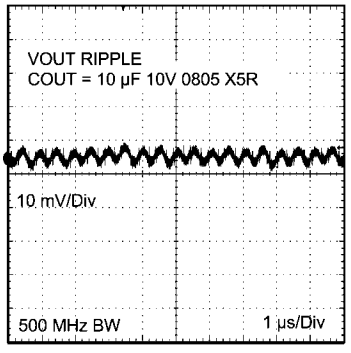


30166668

**Radiated EMI**
**$V_{IN}$ = 5V, $V_{OUT}$ = 1.8V, $I_{OUT}$ = 1A**

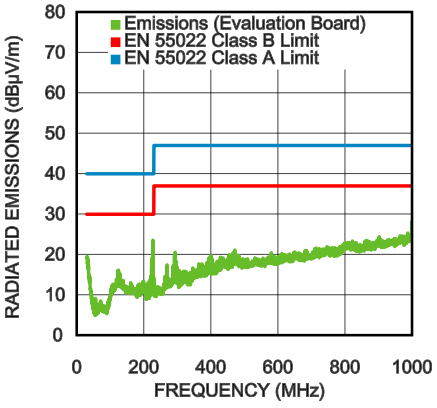


30166667



 

## Evaluation Board Schematic and Bill of Matertials

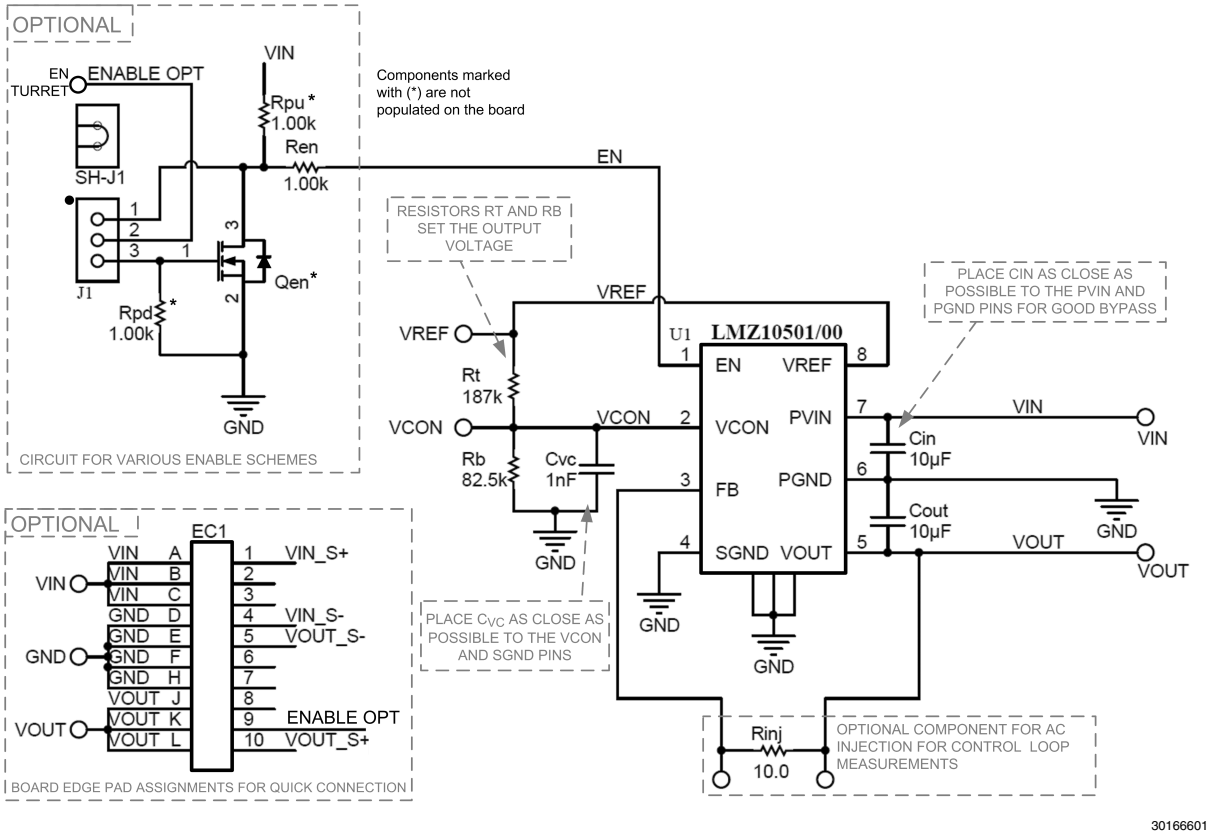


**FIGURE 1. Evaluation Board Schematic**

**TABLE 1. LMZ10501 and LMZ10500 Bill of Materials, $V_{IN}$ = 2.7V to 5.5V, $V_{OUT}$ = 1.8V, $I_{OUT\ (MAX)}$ = 1000mA / 650mA**

| Designator | Description | Case Size | Manufacturer | Manufacturer P/N | Quantity |
|---|---|---|---|---|---|
| U1 | SIMPLE SWITCHER® Nano Module | SE08A | National Semiconductor | LMZ10501SE or LMZ10500SE | 1 |
| $C_{IN}$, $C_{OUT}$ | 10 µF, X5R, 10V | 0805 | KEMET | C0805C106K8PACTU | 2 |
| $C_{VC}$ | 1000 pF | 0603 | TDK | C1608C0G2A102J | 1 |
| $R_B$ | 82.5 kΩ | 0603 | Vishay-Dale | CRCW060382K5FKEA | 1 |
| $R_T$ | 187 kΩ | 0603 | Vishay-Dale | CRCW0603187KFKEA | 1 |
| $R_{EN}$ (optional) | 1 kΩ | 0603 | Vishay-Dale | CRCW06031K00FKEA | 1 |
| $R_{INJ}$ (optional) | 10 Ω | 0603 | Vishay-Dale | CRCW060310R0FKEA | 1 |

### Optional Components and Footprints

- $R_{INJ}$ resistor – allows for a network analyzer connection to measure the control loop response. Replace this resistor with a short in a final design if control loop measurements are not needed.
- $R_{PU}$ resistor – an optional footprint to pull EN up to $V_{IN}$ with an external resistor. EN is internally pulled up to $V_{IN}$ by a 790 kΩ resistor.
- $R_{EN}$ – an optional resistor in series with the EN pin.
- $R_{PD}$ – an optional pull-down resistor for the $Q_{EN}$ gate.
- $Q_{EN}$ – an optional footprint to use an N-ch MOSFET as a pull-down device for EN.
- J1 – jumper to select how to drive EN. Connecting the jumper pins 1 and 2 allows for driving EN directly from the EN turret at the edge of the board. Connecting the jumper pins 2 and 3 allows for driving the gate of the pull-down device $Q_{EN}$.
- EC1 – board edge connector for quick testing.
- $C_{OUT}$ footprints – the solder mask on the $V_{OUT}$ side of the board is removed to allow for different output capacitor configurations.

## Evaluation Board Layout

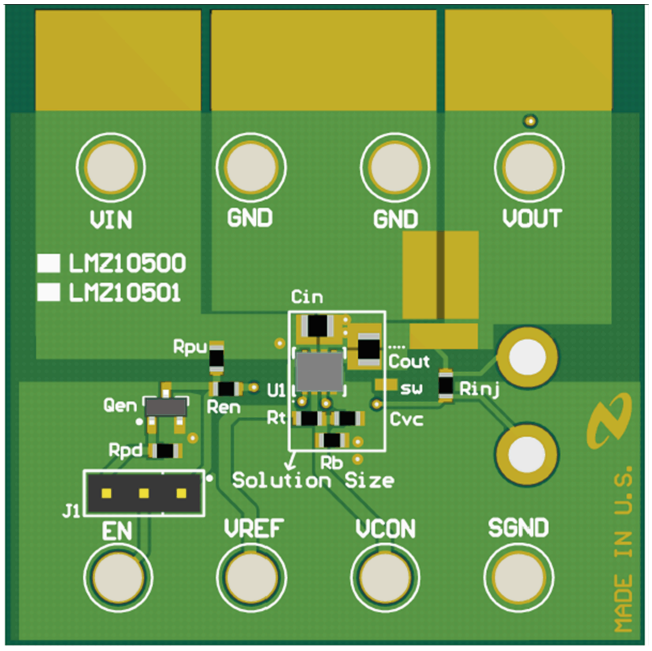


30166655

FIGURE 2. Evaluation Board Top View

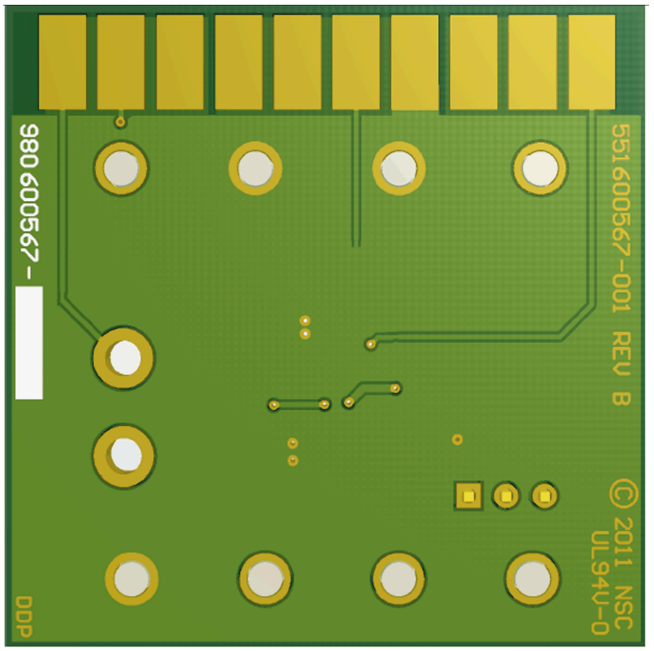


30166656

FIGURE 3. Evaluation Board Bottom View

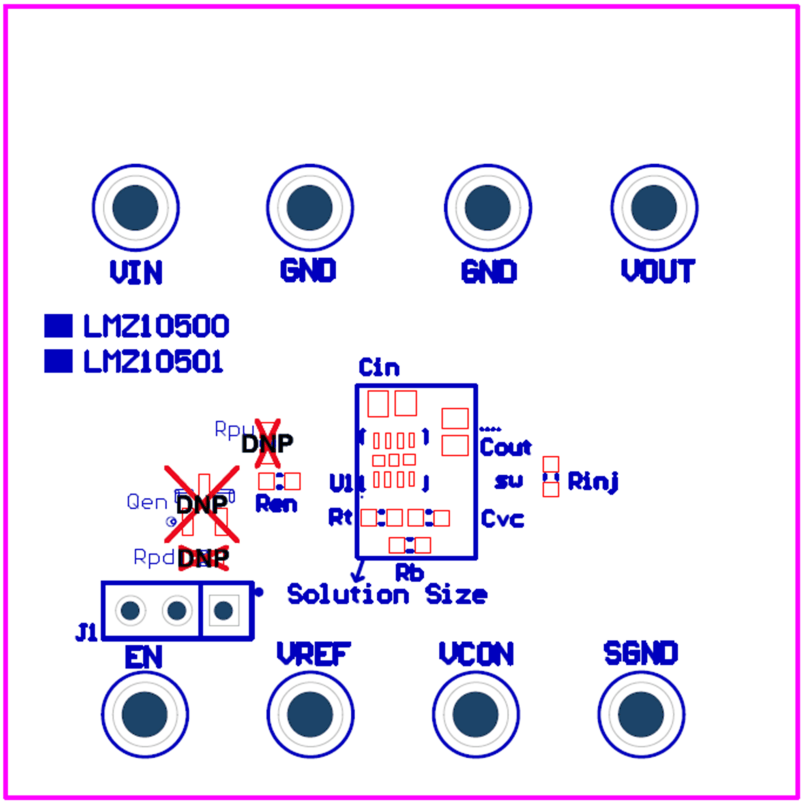


30166657

FIGURE 4. Evaluation Board Assembly (DNP = not populated components)

## Typical Performance for $V_{OUT}$ = 1.8V

Unless otherwise specified the following conditions apply: $V_{IN}$ = 5V, $I_{OUT}$ = 1A, $T_A$ = 25°C

**Efficiency**

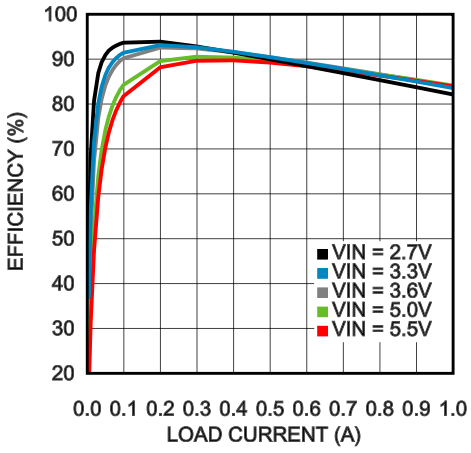


30166659

**Line and load regulation**

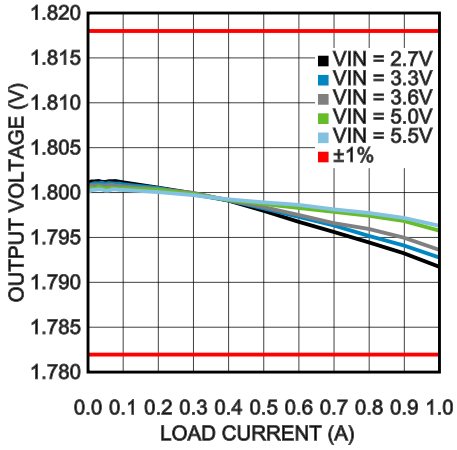


30166660

**Output Voltage Ripple**

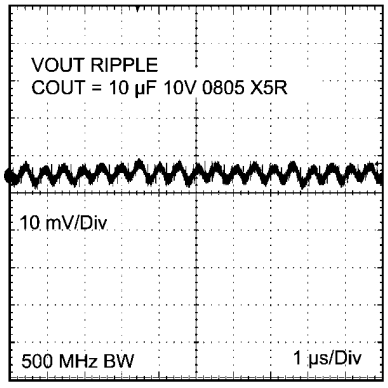


30166668

**Radiated EMI**

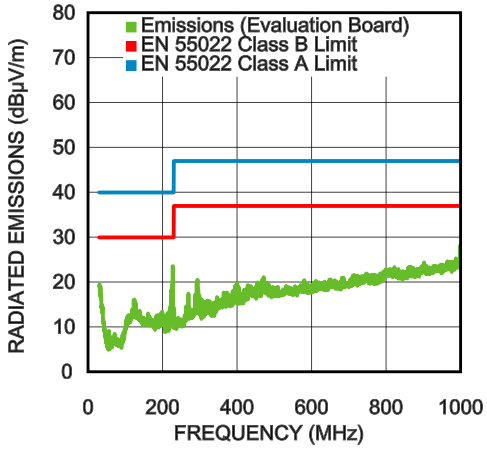


30166667

**Load Transient Response**

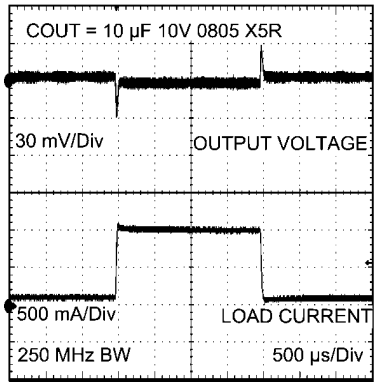


30166671

**DC Current Limit**

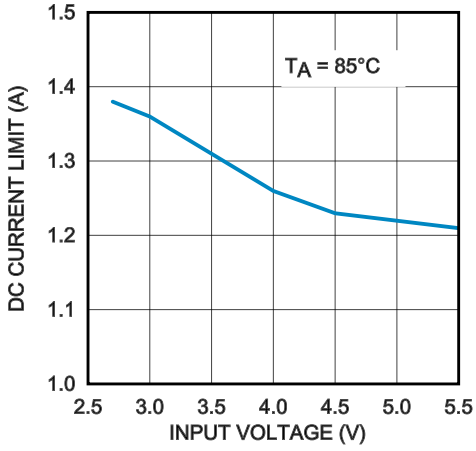


30166670

**Thermal Derating**

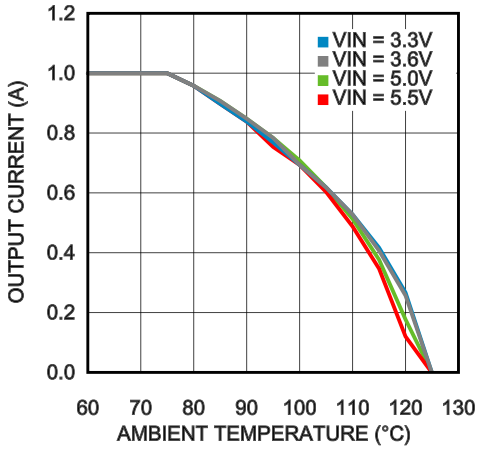


30166669

**Conducted EMI with the Input LC Filter**

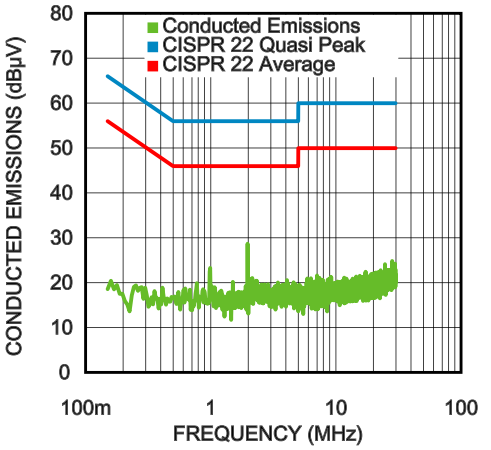


30166674

**Dropout Voltage**

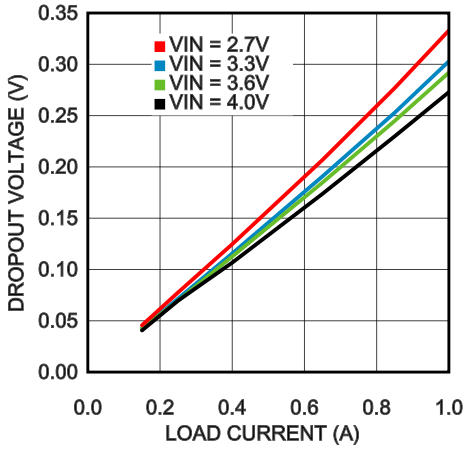


30166672

**Radiated EMI with the Input LC Filter**

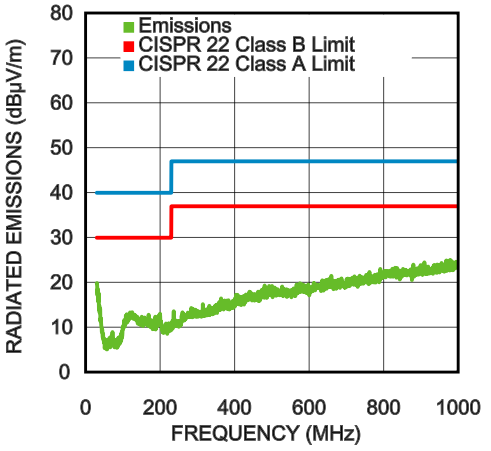


30166675

**Input LC Filter for Conducted EMI**

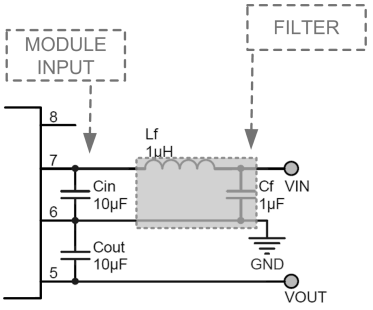


Cf = 0603YD105MAT AVX
Lf = VLS252015T-1R0N1R7 TDK

30166673

## Other Output Voltage Settings

For other output voltages, choose $R_T$ = 80kΩ to 300kΩ
Then calculate $R_B$ using

$$R_B = V_{OUT} \times R_T / (5.875V - V_{OUT})$$

### $V_{OUT}$ = 1.2V

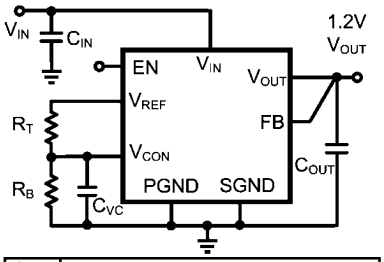


| | | | | |
|---|---|---|---|---|
| $C_{IN}$ | 10 µF | ≥ 6.3V | 0805 | X7R or X5R |
| $C_{OUT}$ | 10 µF | ≥ 6.3V | 0805 | X7R or X5R |
| $C_{VC}$ | 470 pF | ≥ 6.3V | 0603 | X7R or X5R |
| $R_T$ | 243 kΩ | 1% | 0603 | |
| $R_B$ | 63.4 kΩ | 1% | 0603 | |

30166663

### $V_{OUT}$ = 2.5V

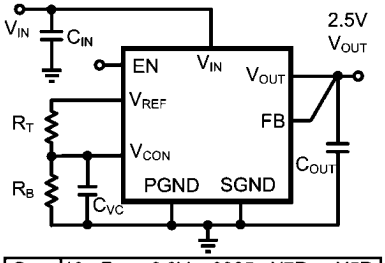


| | | | | |
|---|---|---|---|---|
| $C_{IN}$ | 10 µF | ≥ 6.3V | 0805 | X7R or X5R |
| $C_{OUT}$ | 10 µF | ≥ 6.3V | 0805 | X7R or X5R |
| $C_{VC}$ | 470 pF | ≥ 6.3V | 0603 | X7R or X5R |
| $R_T$ | 150 kΩ | 1% | 0603 | |
| $R_B$ | 118 kΩ | 1% | 0603 | |

30166665

### $V_{OUT}$ = 3.3V

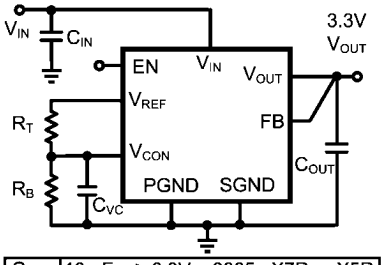


| | | | | |
|---|---|---|---|---|
| $C_{IN}$ | 10 µF | ≥ 6.3V | 0805 | X7R or X5R |
| $C_{OUT}$ | 10 µF | ≥ 6.3V | 0805 | X7R or X5R |
| $C_{VC}$ | 470 pF | ≥ 6.3V | 0603 | X7R or X5R |
| $R_T$ | 118 kΩ | 1% | 0603 | |
| $R_B$ | 150 kΩ | 1% | 0603 | |

30166666

# Notes

**For more National Semiconductor product information and proven design tools, visit the following Web sites at: www.national.com**

| Products | | Design Support | |
|---|---|---|---|
| Amplifiers | www.national.com/amplifiers | WEBENCH® Tools | www.national.com/webench |
| Audio | www.national.com/audio | App Notes | www.national.com/appnotes |
| Clock and Timing | www.national.com/timing | Reference Designs | www.national.com/refdesigns |
| Data Converters | www.national.com/adc | Samples | www.national.com/samples |
| Interface | www.national.com/interface | Eval Boards | www.national.com/evalboards |
| LVDS | www.national.com/lvds | Packaging | www.national.com/packaging |
| Power Management | www.national.com/power | Green Compliance | www.national.com/quality/green |
| Switching Regulators | www.national.com/switchers | Distributors | www.national.com/contacts |
| LDOs | www.national.com/ldo | Quality and Reliability | www.national.com/quality |
| LED Lighting | www.national.com/led | Feedback/Support | www.national.com/feedback |
| Voltage References | www.national.com/vref | Design Made Easy | www.national.com/easy |
| PowerWise® Solutions | www.national.com/powerwise | Applications & Markets | www.national.com/solutions |
| Serial Digital Interface (SDI) | www.national.com/sdi | Mil/Aero | www.national.com/milaero |
| Temperature Sensors | www.national.com/tempsensors | SolarMagic™ | www.national.com/solarmagic |
| PLL/VCO | www.national.com/wireless | PowerWise® Design University | www.national.com/training |



For the most current product information visit us at www.national.com

**National Semiconductor Americas Technical Support Center**
Email: support@nsc.com
Tel: 1-800-272-9959

**National Semiconductor Europe Technical Support Center**
Email: europe.support@nsc.com

**National Semiconductor Asia Pacific Technical Support Center**
Email: ap.support@nsc.com

**National Semiconductor Japan Technical Support Center**
Email: jpn.feedback@nsc.com